Beetronics
2 Lakeside Drive, Park Royal, London, NW10 7FQ, United Kingdom
020 3608 7495 · info@beetronics.co.uk

Model: PSU1-LOCK-MAR-US

24V power adapter with lock, US plug

View product online

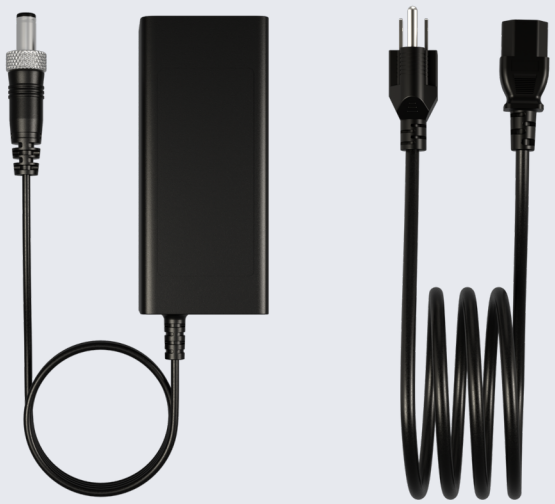

Features

- Input: 100-240V AC ~ 50/60Hz, 1.5A Max
- Output: 24V 3.0A, 72W
- DC plug size: 5.5 mm × 2.1 mm
- Cable length: 250 cm

The PSU1-LOCK-US is a reliable external power adapter designed for professional applications and continuous use. This adapter accepts a wide input range of 100-240V AC at 50/60Hz and is equipped with a 2-pin US plug, making it suitable for any standard US wall socket. With a cable length of 2,5 meters, the PSU1-LOCK-US delivers a stable output of 19V 2.5A (47.5W) via a 5.5 mm DC plug. This power supply is compatible with all Beetronics high-brightness displays.

©2026 Beetronics

Beetronics
2 Lakeside Drive, Park Royal, London, NW10 7FQ, United Kingdom
020 3608 7495 · info@beetronics.co.uk

General

Manufacturer	Beetronics
Product name	24V power adapter with lock, US plug
Item number	PSU1-LOCK-MAR-US
Warranty	2 years

Mechanical

Weight	300 grams
Colour	Black
Cable length	250 cm (AC: 100 cm / DC: 150 cm)

Power

Inner diameter	2.1 mm
Outer diameter	5.5 mm
Connector type	US
Voltage	24 Volt
Amperage	2.5 Ampere
Polarity	- outside / + inside

Package content

Includes	Power supply

Compatibility

Compatible with	10HB9M/U1, 12HB9M/U1, 15HB9M/U1, 17HB9M/U1, 19HB9M/U1, 22HB9M/U1, 24HB9M/U1, 27HB9M/U1

EPR Weights

Plastic Packaging Weight (in Gram)	1
Transport Packaging Weight (in Gram)	20
Total Packaging Weight (in Gram)	21
WEEE Weight (in Gram)	300

©2026 Beetronics

Beetronics
2 Lakeside Drive, Park Royal, London, NW10 7FQ, United Kingdom
020 3608 7495 · info@beetronics.co.uk

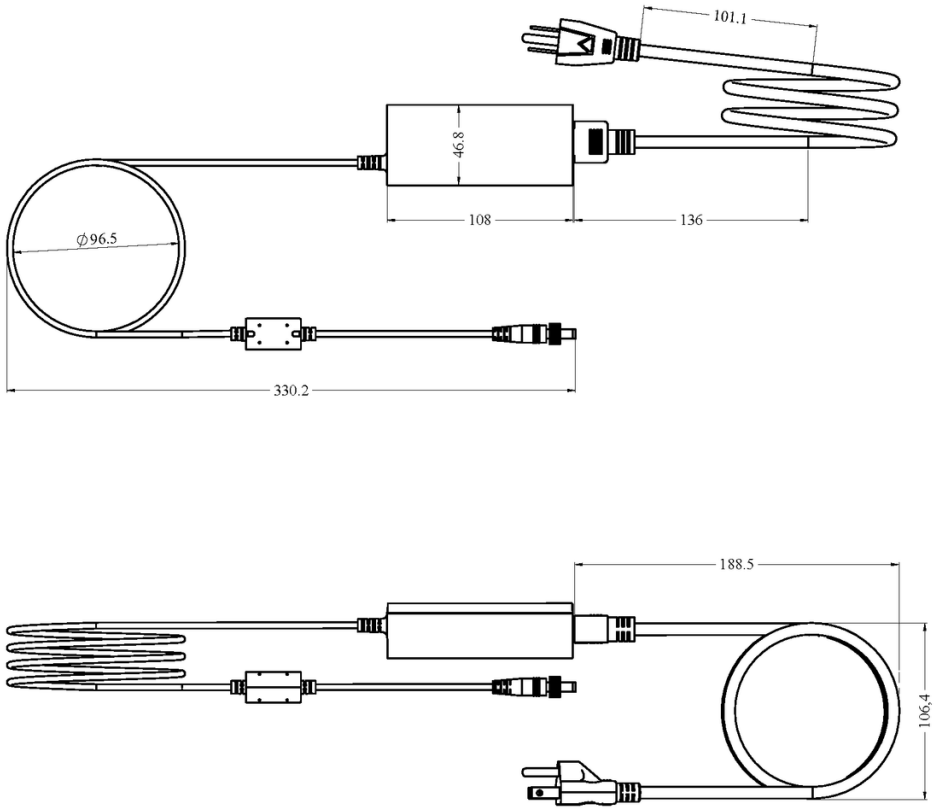

©2026 Beetronics
Dimensions are in mm.