Beetronics
2 Lakeside Drive, Park Royal, London, NW10 7FQ, United Kingdom
020 3608 7495 · info@beetronics.co.uk

Model: PSU1-LOCK-MAR-US

24V power adapter with lock, US plug

View product online

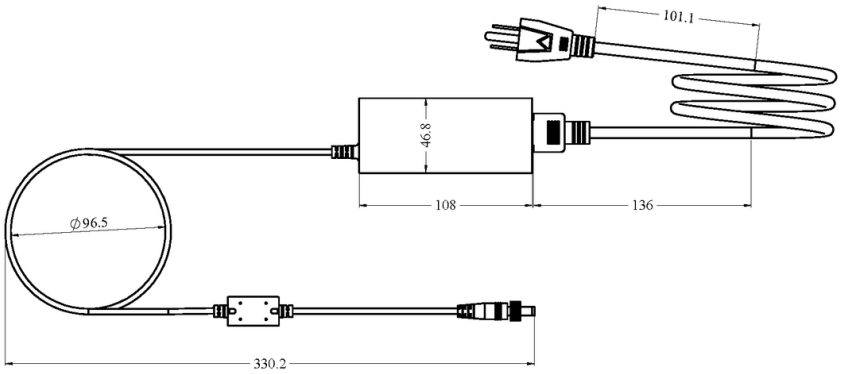

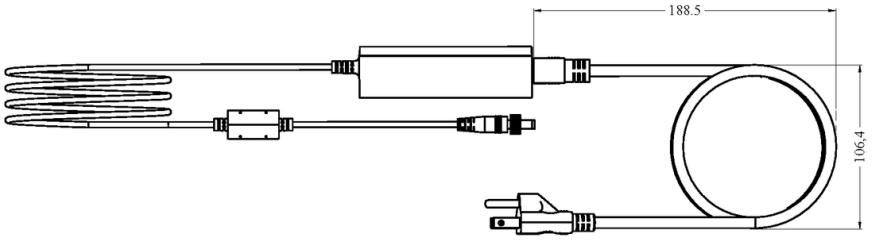

©2026 Beetronics

Dimensions are in mm.